Composed® Widespread Basin Set with Lever Handles

TAPWARE / BASIN **C - BSN**

Product
- Composed® widespread basin set with lever handles

Kohler Code
73060T-4ND*

NOTE: Polished Chrome version shown

Included Components
- Concealed breech piece

Features
- Polished Chrome or PVD Titanium finish
- Metal construction
- 1/4 turn ceramic disc cartridges
- Suitable for mains pressure
- KOHLER finishes resist tarnishing and corrosion

WELS RATING
(5 Star 6.0 Litres / min)

Finish Options (Colour swatches indicative only)

73060T-4ND-CP - Polished Chrome

73060T-4ND-TT - PVD Titanium

Related Products
- Composed accessories
- Composed tapware

Technical Details

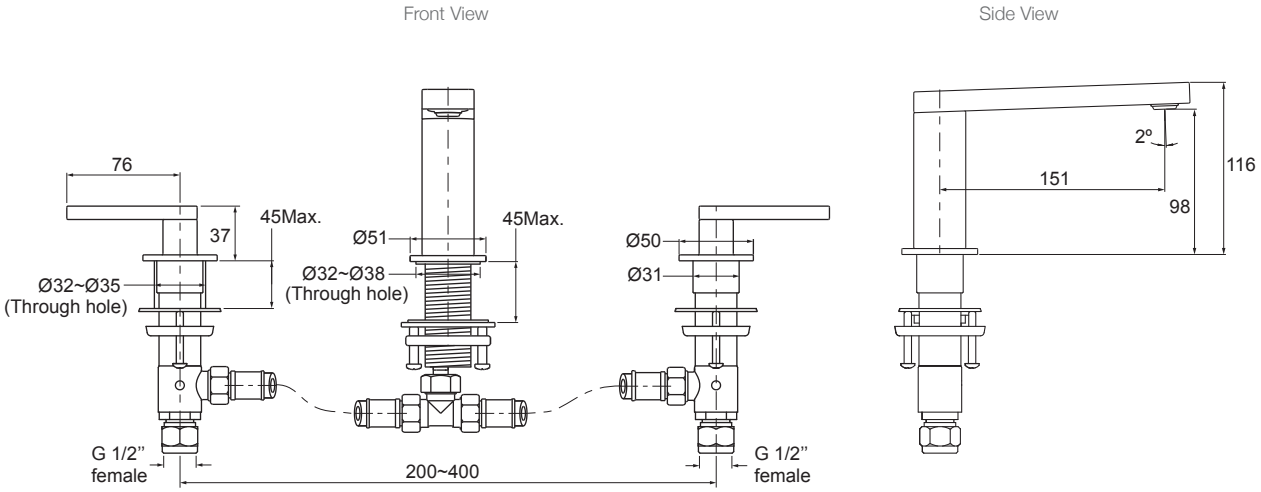

G½" is equal to BSP½"

Installation Notes:
- G1/2" female inlets.
- Optimum working pressure 300-500 kPa.
- Maximum hydrostatic pressure 800 kPa (This pressure may be exceeded only under test conditions).
- Maximum temperature 80°C.
- Maximum bench thickness is 45mm.
- Where normal working pressure exceeds the maximum, pressure limiting valves should be installed.
- Inline filters should be used to protect tapware from debris that may be present within the plumbing.