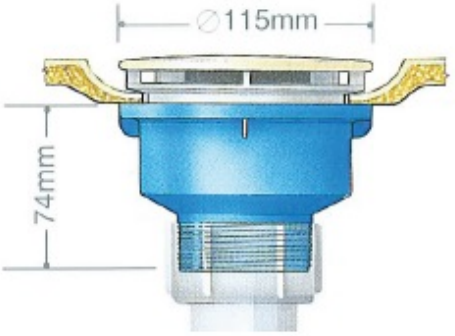
∅115mm
74mm

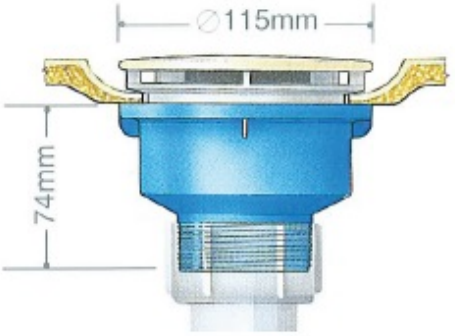
∅115mm
74mm

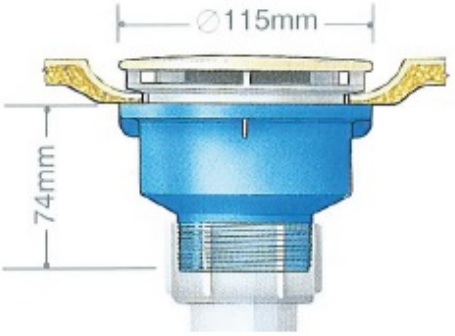
∅115mm
74mm