Gas cooktop KM 2357

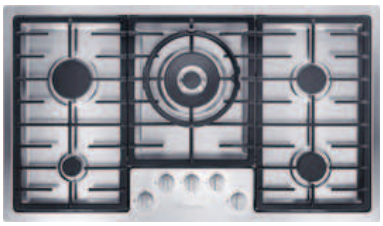

Gas cooktop
with electronic functions for maximum safety and user convenience.

- Optimal - single-handed operation w/ rotary dial& QuickStart
- Professional design - 892 mm wide stainless steel trough
- Particularly versatile - 5 burners incl. 1 dual wok
- Extremely safe - GasStop&Restart function
- Easy cleaning - dishwasher-safe ComfortClean pot rests

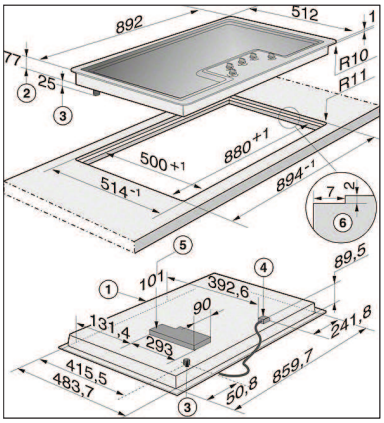

KM 2357 (Installation drawing) VG AUS

1. Front
2. Building-in depth
3. Gas connection R 1/2 - ISO 7-1 (DIN EN 10226)
4. Mains connection box with mains connection cable, L = 2,000 mm
5. Electronics housing - max. building-in depth, including electronics housing, 101 mm
5. Stepped cut-out for granite or marble worktops

Building-in information:
Flush fit cooktops are only suitable for installation in granite, marble, or tiled worktops.
For all other worktop materials, consult the worktop manufacturer whether it can be used with a flush-fit cooktop.
As the appliance and the worktop cut-out have a certain dimensional tolerance, gap can vary.

Heating type	
Heating type	Gas
Construction type	
Independent of oven	•
Design	
Stainless steel trough	•
Miele logo embossed in stainless steel	•
Cast iron pot rest (matt black enamelled)	•
Ring details	
No. of rings	5
Ring	
Position	front left
Type	Economy burner
Power rating in W	1.000
Ring	
Position	rear left
Type	High-speed burner
Power rating in W	2.700
Ring	
Position	Centred
Type	Dual wok burner
Power rating in W	4.500
Ring	
Position	rear right
Type	Standard burner
Power rating in W	1.700
Ring	
Position	front right
Type	Standard burner
Power rating in W	1.700
User convenience	
Operation via knobs	•
Electronic ignition with one-handed operation	•
QuickStart	•
Cleaning convenience	
Dishwasher-proof pot rests	•
Safety	
Safety cut-out	•
GasStop & ReStart	•
Technical data	
Dimensions in mm (width)	892
Dimensions in mm (height)	77
Dimensions in mm (depth)	512
Built-in height with mains connection box in mm	101
Cutout dimensions in mm (width)	894
Cutout dimensions in mm (depth)	514
Weight in kg	19
Total connected load in kW	11,9
Voltage in V	230
Fuse rating in A	10
Number of phases	1
Cable length in m	2,0

Gas cooktop KM 2357

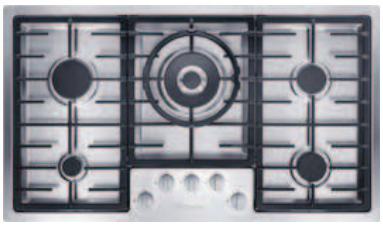

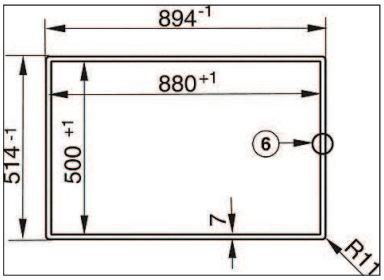

KM 2357 (Installation drawing) - Cut-out for granite or marble worktops - VG AUS

6. Stepped cut-out for granite or marble worktops

Building-in information:
Flush fit cooktops are only suitable for installation in granite, marble, or tiled worktops.
For all other worktop materials, consult the worktop manufacturer whether it can be used with a flush-fit cooktop.
As the appliance and the worktop cut-out have a certain dimensional tolerance, gap can vary.

Standard accessories	
Jet set for liquid gas	•
Wok ring	•
Small trivet	•

Gas cooktop KM 2357

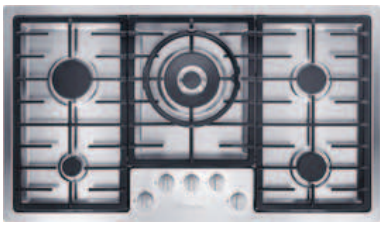

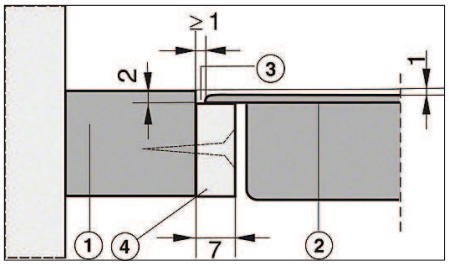

KM 2357 (Installation drawing) - Installation in solid wood or tiled worktops - VG AUS

1. Worktop
2. Gas cooktop
3. Gap
4. Wooden frame (7 mm, to be provided on-site)

Building-in information:
Flush fit cooktops are only suitable for installation in granite, marble, or tiled worktops.
For all other worktop materials, consult the worktop manufacturer whether it can be used with a flush-fit cooktop.
As the appliance and the worktop cut-out have a certain dimensional tolerance, gap can vary.

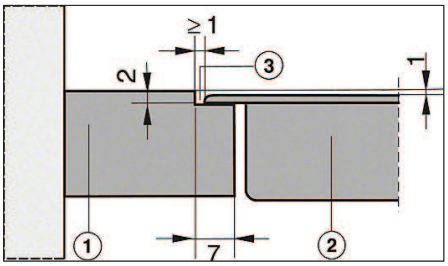

KM 2357 (Installation drawing) Installation in granite and marble worktops - VG AUS

1. Worktop
2. Gas cooktop
3. Gap

Building-in information:
Flush fit cooktops are only suitable for installation in granite, marble, or tiled worktops.
For all other worktop materials, consult the worktop manufacturer whether it can be used with a flush-fit cooktop.
As the appliance and the worktop cut-out have a certain dimensional tolerance, gap can vary.

Gas cooktop KM 2354

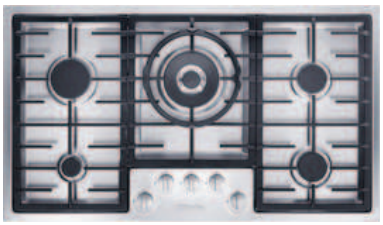

Price **$ 2,399.00** *

* GST inclusive

Gas cooktop
in maximum width for the best possible cooking and user convenience.

- Simple controls -single-handed operation via dial controls
- Modern design - 90 cm wide near-flush stainless-steel trough
- Particularly versatile - 5 burners incl. 1 dual wok
- Extremely safe - GasStop function
- Easy cleaning - dishwasher-safe ComfortClean pot rests

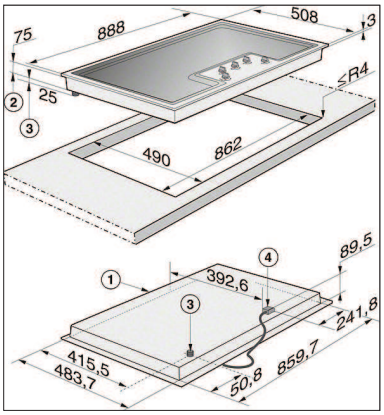

KM 2354 (Installation drawing) VG AUS

1. front
2. Building-in depth
3. Gas connection R 1/2 - ISO 7-1 (DIN EN 10226)
4. Mains connection box with mains connection cable L = 2000 mm

Heating type	
Heating type	Gas
Construction type	
Independent of oven	•
Design	
Stainless steel trough	•
Miele logo embossed in stainless steel	•
Cast iron pot rest (matt black enamelled)	•
Ring details	
No. of rings	5
Ring	
Position	front left
Type	Economy burner
Power rating in W	1.000
Ring	
Position	rear left
Type	High-speed burner
Power rating in W	2.700
Ring	
Position	Centred
Type	Dual wok burner
Power rating in W	4.500
Ring	
Position	rear right
Type	Standard burner
Power rating in W	1.700
Ring	
Position	front right
Type	Standard burner
Power rating in W	1.700
User convenience	
Operation via knobs	•
Electronic ignition with one-handed operation	•
Cleaning convenience	
Dishwasher-proof pot rests	•
Safety	
GasStop	•
Technical data	
Dimensions in mm (width)	888
Dimensions in mm (height)	75
Dimensions in mm (depth)	508
Built-in height with mains connection box in mm	90
Cutout dimensions in mm (width)	860
Cutout dimensions in mm (depth)	490
Weight in kg	19
Total connected load in kW	11,9
Voltage in V	230
Fuse rating in A	10
Number of phases	1
Cable length in m	2,0
Standard accessories	
Connection cable	•
Jet set for liquid gas	•
Wok ring	•
Small trivet	•